GER

VETERINARY RADIOLOGY

VET-TECH 300HF ADVANCED

INNOVATION AND WORLDWIDE EXCLUSIVITY

PICOXIA: Artificial intelligence veterinary diagnostic aid

- With thorax and abdominal pattern detection
- Automated computation of clinical indexes (VHS / Dysplasia)

PICOXIA

EXCLUSIVE GER X-RAY TECHNOLOGY:

- SOURCE X-RAY
- DIRECT DIGITAL ACQUISITION
- VETERINARY DIAGNOSTIC AID

AN EFFICIENT GER CONSOLE:

- Direct control of the generator and the digital flat panel detector
- Automatic regulation of constants (kV and mA)

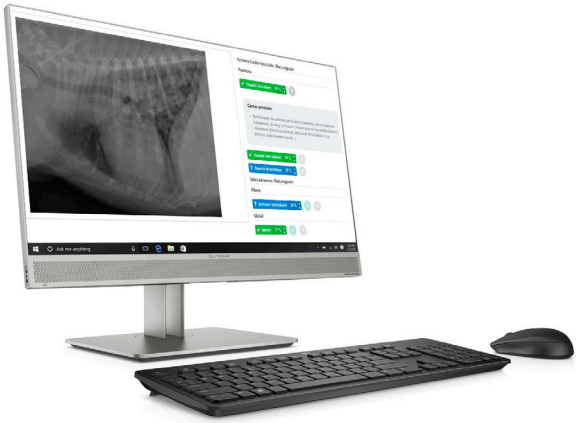

ADVANCE YOUR RADIOLOGY!

- Optimal image quality for precise diagnostics
- Top of the range manufacturing for better reliability
- Time saving thanks to direct digital technology
- Quality recognized with the NFC 74100 standard
- Easy installation (standard 230V power supply)
- Instant X-Ray trigger pedal (for thoracic radios)
- Radioprotection facilitated with shot history by operators
- Positioning aid of the animal

made in France registered by ASN

GER International
37 rue du bois chaland, 91090 Lisses
Tel: +33 1 60 86 17 17 Fax: +33 1 60 86 51 63
E-mail: contact@ger-int.com
Website: www.fas-imagerie.com

FAS

GER

VETERINARY RADIOLOGY

VET-TECH 300HF ADVANCED

THE VET-TECH CONCEPT LAUNCHED BY GER

is the result of an approach to radiology combining precision, reliability and simplicity for veterinarians

TECHNICAL SPECIFICATIONS X-RAY GENERATOR GER 300HF

Power	30 kW
Anode	Rotating
Filaments size	0,6/1,3 mm
Electrical mains supply	230V 16A (3kW)
Max anodic current (mA)	425 mA
mA range, increm.of 25	25 to 300
kV range, increm.of 1KV	40 to 120
Anatomic Menu and positioning assistance	66 incidences
collimator	R302
Grid 35x43 cm 40 LPM	Yes
Operator shots history	Yes
Table weight	250 Kg

TECHNICAL SPECIFICATIONS FLAT PANEL DETECTOR GER DR4343

Scintillator	CsI
Dimensions (W xH x D)	460 mm x 460 mm x 15,1 mm (18.1" x 18.1" x 0.6")
Weight	4.7 kg (10.4 lbs)
Pixel matrix	3,072 x 3,072 pixel
Active area	43 cm x 43 cm (17" x 17")
A/D conversion	14 bits
Spatial resolution	min. 4.0 lp/mm
Image transfert time	2 s
Power consumption	max. 16 W
Synchronisation	AED (Automatic Exposure Detection) external trigger
Warranty	12-month warranty
GER PicoxIA console	Software controls detector, image acquisition and optimization, connects dose area product measurement device, Data storage & Option: Artificial intelligence for diagnostic aid

DIMENSIONS (mm)

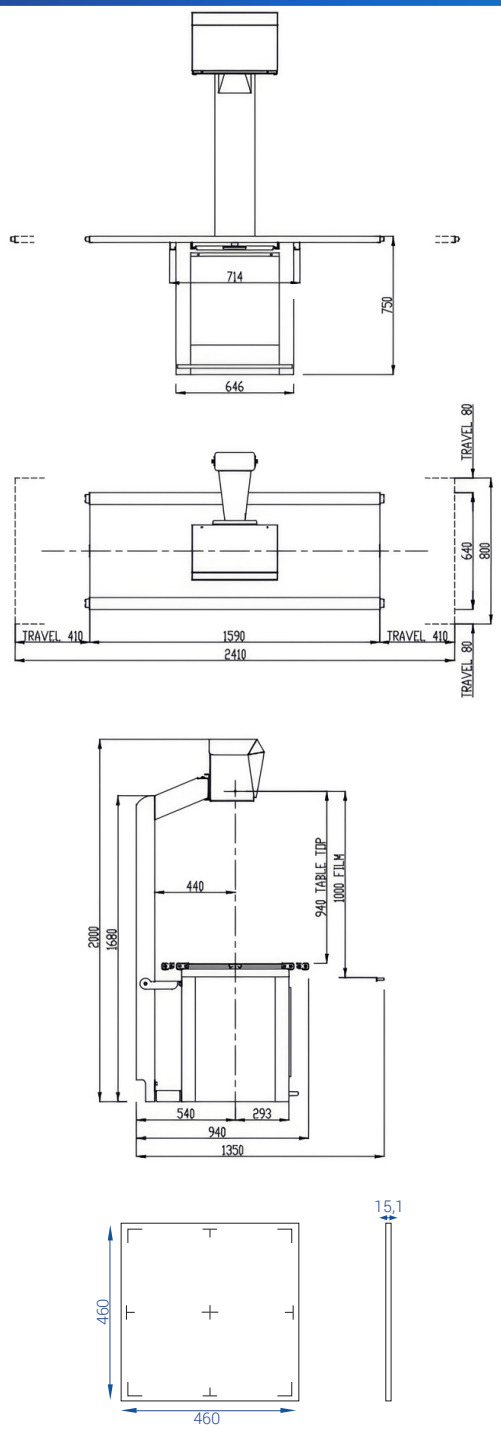

Photos copyright DR . Non-contractual photos. Do not litter on the public zone . RCS Evry 852 463 645

GER International
37 rue du bois chaland, 91090 Lisses
Tel: +33 1 60 86 17 17 Fax: +33 1 60 86 51 63
E-mail: contact@ger-int.com
Website: www.fas-imagerie.com